SlimLine 38

Light, Elegance and Comfort

SHIPRADE

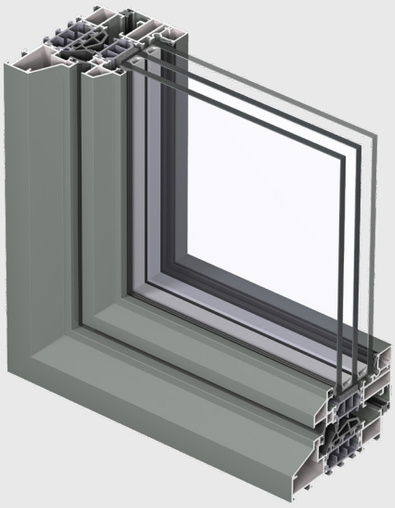

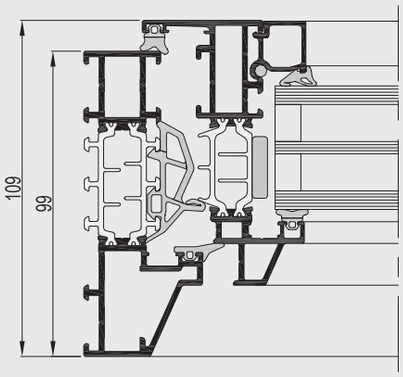

SlimLine 38 is a highly insulated system inward and outward opening windows and doors, which combines elegance and comfort, with a unique design. This special slender steel look is the perfect solution for modern architecture and renovation of steel-framed windows, respecting the original design but offering a thermally improved solution.

The SL 38 system is available in 3 different minimalistic design variants, Classic, Ferro and Cubic, to perfectly match the architectural aspect of the building. The windows and doors can be provided with double and triple glazing without losing the ultra-slim look.

In combination with its superior insulation capabilities, the system provides the perfect harmony between durable material, clean design and demanding architectural challenges.

SLIMLINE 38

TECHNICAL CHARACTERISTICS

Design variants		CLASSIC	CUBIC	FERRO
Min. visible width inward opening window	Frame	33.5 mm	33.5 mm	33.5 mm
	Vent	23 mm	22 mm	21.5 mm
Min. visible width outward opening window	Frame	29 mm	-	18.5 mm
	Vent	60.5 mm	-	60.5 mm
Min. visible width inward opening window-door	Frame	33.5 mm	33.5 mm	59.5 mm
	Vent	52.5 mm	52.5 mm	52.5 mm
Min. visible width outward opening window-door	Frame	29 mm	-	18.5 mm
	Vent	82 mm	-	82 mm
Min. visible width T-profile		48 mm	48 mm	48 mm
Overall system depth window	Frame	99 mm	76 mm	76 mm
	Vent	86 mm	75 mm	72 mm
Rebate height		13.5 mm	13.5 mm	13.5 mm
Glass thickness		up to 55 mm	up to 55 mm	up to 55 mm
Glazing method		dry glazing with EPDM or neutral silicones		
Thermal insulation		omega-shaped fibreglass reinforced polyamide strips (frame 40 mm - vent 32 mm)		
High Insulation variant (HI)		available	available	available

PERFORMANCES

	ENERGY										
	Thermal Insulation [1] EN ISO 10077-2	Uf-value down to 1.7 W/m²K depending on the frame/vent combination and the glass thickness. Uw of less than 1.4 W/m²K for a standard window section[2]									
	COMFORT										
	Acoustic performance[3] EN ISO 140-3; EN ISO 717-1	$R_w(C;C_{tr})$ = 38 (-1; -4) dB / 45 (-1; -5) dB, depending on glazing type									
	Air tightness, max. test pressure[4] EN 1026; EN 12207	1 (150 Pa)	2 (300 Pa)	3 (600 Pa)	4 (600 Pa)						
	Water tightness[5] EN 1027; EN 12208	1A (0 Pa)	2A (50 Pa)	3A (100 Pa)	4A (150 Pa)	5A (200 Pa)	6A (250 Pa)	7A (300 Pa)	8A (450 Pa)	9A (600 Pa)	E (1200 Pa)
	Wind load resistance, max. test pressure [6] EN 12211; EN 12210	1 (400 Pa)	2 (800 Pa)	3 (1200 Pa)	4 (1600 Pa)	5 (2000 Pa)	Exxx (> 2000 Pa)				
	Wind load resistance to frame deflection[6] EN 12211; EN 12210	A (≤ 1/150)	B (≤ 1/200)	C (≤ 1/300)							
	SAFETY										
	Burglar resistance[7] EN 1628-EN 1630; EN 1627	RC 1	RC 2	RC 3							

This table shows possible classes and values of performances. The values indicated in red are the ones relevant to this system.

(1) The Uf-value measures the heat flow. The lower the Uf-value, the better the thermal insulation of the frame.
(2) Window dimension of 1.23m x 1.48m, with glass of 1.1 W/m²K.
(3) The sound reduction index (Rw) measures the capacity of the sound reduction performance of the frame.
(4) The air tightness test measures the volume of air that would pass through a closed window at a certain air pressure.
(5) The water tightness testing involves applying a uniform water spray at increasing air pressure until water penetrates the window.
(6) The wind load resistance is a measure of the profile's structural strength and is tested by applying increasing levels of air pressure to simulate the wind force. There are up to five levels of wind resistance (1 to 5) and three deflection classes (A,B,C). The higher the number, the better the performance.
(7) The burglar resistance is tested by static and dynamic loads, as well as by simulated attempts to break in using specified tools. This variant requires specific burglar resistance accessories.

Shiprade Dış Ticaret · Eskişehir, Türkiye
+90 542 733 00 41 · info@shiprade.com · www.shiprade.com