CS 59Pa

Ideal in warm climates

SHIPRADE

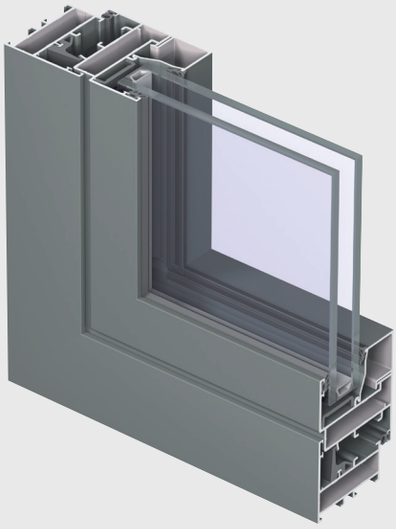

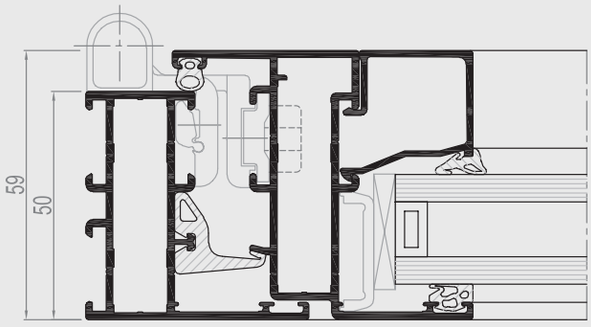

CS 59Pa offers an extensive range of non-insulated profiles for the construction of elegant and moderately priced aluminium frames in functional style. Therefore CS 59Pa is the ideal system for outdoor applications in warm climates but it can also be used for the partitioning of indoor office spaces.

The system is available in inward and outward opening windows and inward and outward opening flush doors.

CS 59Pa_EN_new Indesign.indd 1 3/26/2018 12:15:08 PM

TECHNICAL CHARACTERISTICS

Style variants		FUNCTIONAL	RENAISSANCE
Min. visible width inward opening window	Frame	49 mm	55 mm
	Vent	31 mm	31 mm
Min. visible width outward opening window	Frame	19.5 mm	-
	Vent	89 mm	-
Min. visible width inward opening window door	Frame	60 mm	-
	Vent	64 mm	-
Min. visible width inward opening flush door	Frame	61.5 mm	-
	Vent	72.5 mm	-
Min. visible width outward opening flush door	Frame	36.5 mm	-
	Vent	97.5 mm	-
Min. visible width T-profile		74 mm	74 mm
Overall system depth window	Frame	50 mm	59 mm
	Vent	59 mm	68 mm
Rebate height		25 mm	25 mm
Glass thickness		up to 35 mm	up to 35 mm
Glazing method		dry glazing with EPDM or neutral silicones	

PERFORMANCES

	COMFORT										
	Acoustic performance [1] EN ISO 140-3; EN ISO 717-1	Rw (C; Ctr) = 36 (-1; -3) dB / 44 (-2; -4) dB, depending on glazing type									
	Air tightness, max. test pressure [2] EN 1026; EN 12207	1 (150 Pa)		2 (300 Pa)		3 (600 Pa)		4 (600 Pa)			
	Water tightness [3] EN 1027; EN 12208	1A (0 Pa)	2A (50 Pa)	3A (100 Pa)	4A (150 Pa)	5A (200 Pa)	6A (250 Pa)	7A (300 Pa)	8A (450 Pa)	9A (600 Pa)	E (750 Pa)
	Wind load resistance, max. test pressure [4] EN 12211; EN 12210	1 (400 Pa)		2 (800 Pa)		3 (1200 Pa)	4 (1600 Pa)	5 (2000 Pa)		Exxx (> 2000 Pa)	
	Wind load resistance to frame deflection [4] EN 12211; EN 12210	A (≤ 1/150)				B (≤ 1/200)		C (≤ 1/300)			
	SAFETY										
	Burglar resistance [5] ENV 1627 – ENV 1630	WK 1				WK 2		WK 3			

This table shows possible classes and values of performances. The values indicated in red are the ones relevant to this system.

(1) The sound reduction index (Rw) measures the capacity of the sound reduction performance of the frame.
(2) The air tightness test measures the volume of air that would pass through a closed window at a certain air pressure.
(3) The water tightness testing involves applying a uniform water spray at increasing air pressure until water penetrates the window.
(4) The wind load resistance is a measure of the profile's structural strength and is tested by applying increasing levels of air pressure to simulate the wind force. There are up to five levels of wind resistance (1 to 5) and three deflection classes (A,B,C). The higher the number, the better the performance.
(5) The burglar resistance is tested by static and dynamic loads, as well as by simulated attempts to break in using specified tools.

Shiprade Dış Ticaret · Eskişehir, Türkiye
+90 542 733 00 41 · info@shiprade.com · www.shiprade.com