CP 155 / CP 155-LS

Sophistication for quality and insulation

SHIPRADE

INTERIOR & EXTERIOR BECOME ONE

A sliding window opens up a multitude of possibilities. Through a sliding window, the garden is incorporated into the interior of the house. This creates an extra feeling of space and generates more natural light within the home.

CP 155 SLIDE AND CP 155 LIFT & SLIDE

All types of CP 155 sliding window use durable wheels and stainless steel rails, for optimal opening comfort. In case of a lift & slide system, the sliding window will be lifted before sliding to serve smooth operation. In the closed position, the lift & slide window is put down and anchored, which is an extra plus for isolation and theft prevention. Both systems are higly wind- and waterproof.

MONORAIL, DUO RAIL, 3-RAIL OR MULTI-RAIL

A monorail combines a moving part with a fixed glazed element, anchored directly into the outer frame profile, creating a minimalistic look. The sliding panel can be positioned on the outside or inside. The fixed part on the outside can be very convenient when large fixed glass panes need to be installed at elevated height or when building construction does not allow inside glazing.

MONORAIL	CP 155 / CP 155-HI	CP 155-LS / CP 155-LS/HI
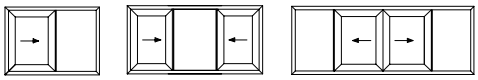	X	X

A duo rail integrates 2 glazed opening vents, which have an identical look resulting in an aesthetic sliding window. Both these vents can be made as sliding element, giving all flexibility to the users.

DUO RAIL	CP 155 / CP 155-HI	CP 155-LS / CP 155-LS/HI
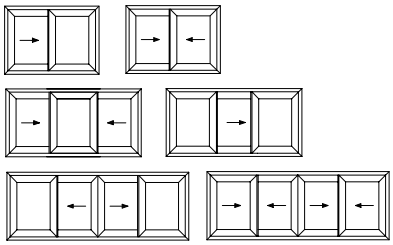	X	X

A 3-rail integrates an extra rail in the outer frame allowing a third opening vent to be installed. This solution allows the user to open-up 2 sliding windows, creating an opening which is double in size.

3-RAIL	CP 155 / CP 155-HI	CP 155-LS / CP 155-LS/HI
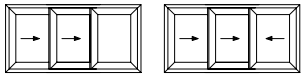	X	X

Even more flexibility is obtained with the unique principle of a **multi-rail**, available in the lift & slide variant. This multi-rail solution allows an expansion of elements up to eight rails, facilitating creative designs with very large openings.

SPECIAL SOLUTIONS

A **glass corner** is a fixed glazed element without any visible corner profiles. This provides optimal daylight and a better view to the outside, and it also allows for seamless façades on the outside. The fixed glass corner can be applied on all CP 155-LS outside glazed monorails.

GLASS CORNER	CP 155 / CP 155-HI	CP 155-LS / CP 155-LS/HI
		X

An **open corner** makes it possible to open up the room without any visible corner elements. In combination with low or zero threshold solutions, this takes away all boundaries between inside and outside. The CP 155-Lift & Slide corner solutions allow to open both in- and outward corners, without compromising the systems' known benefits of comfort and insulation.
The open corner is applicable on CP 155-LS 2-rail and outside glazed monorail.

OPEN CORNER	CP 155 / CP 155-HI	CP 155-LS / CP 155-LS/HI
		X

With a **Pocket solution** up to 8 vents can be slid into the wall when openend, so no visible elements remain and the maximal opening potential can be used. The pocket solution is available for the lift & slide systems in duo rail, 3-rail, or up to 8-rail (multi-rail) compositions.

POCKET SOLUTION	CP 155 / CP 155-HI	CP 155-LS / CP 155-LS/HI
		X

A **low or zero threshold** creates a perfect continuity between the indoor and outdoor spaces and improves the accessibility to the building. This accessibility and comfort is further improved by the solutions for automatic opening.

LOW OR ZERO THRESHOLD	CP 155 / CP 155-HI	CP 155-LS / CP 155-LS/HI
		X

The **Slim Chicane** solution has a meeting section of only 50 mm wide, which fits perfectly with today's architectural trends.

SLIM CHICANE	CP 155 / CP 155-HI	CP 155-LS / CP 155-LS/HI
	X	X

To further enhance accessibility and comfort, CP 155-LS can be **motorised** as an option. This can be applied to certain configurations on mono-, 2- or 3-rail solutions.

MOTORISED	CP 155 / CP 155-HI	CP 155-LS / CP 155-LS/HI
		X

TECHNICAL CHARACTERISTICS			
Variants		CP 155 / CP 155-HI	CP 155-LS / CP 155-LS/HI
Visible width / height	Frame	52 mm	60 mm
	Vent	102 mm	102 mm
	T-profile	from 76 mm till 154 mm	from 76 mm till 154 mm
	Meeting section	115 mm	115 mm
	Threshold	60 mm	20 mm
	Meeting section 4 doors	212 mm	212 mm
Overall system depth	Frame	155 mm / 242 mm (3-rail)	155 mm / 242 mm (3-rail)
	Vent	68 mm	68 mm
Maximal Element height		3500 mm	3500 mm
Maximal vent weight sliding vent		250 Kg	400 Kg
Maximal vent weight fixed vent		1500 Kg	1500 Kg
Rebate height		25 mm	25 mm
Glass thickness		up to 52 mm	up to 52 mm
Glazing method		dry glazing with EPDM or neutral silicones	dry glazing with EPDM or neutral silicones
Thermal insulation		32 mm and 23 mm fibreglass reinforced polyamide strips with 3 chambers	32 mm and 23 mm fibreglass reinforced polyamide strips with 3 chambers
HI variant		extra insulation gaskets	extra insulation gaskets

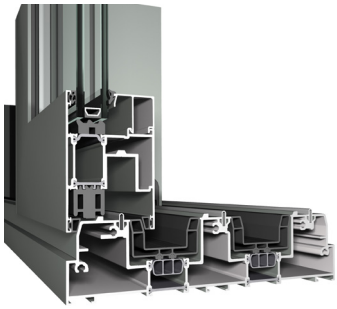

CP 155-LS/HI 3-rail

CP 155-LS/HI low treshold

CP 155-LS zero treshold

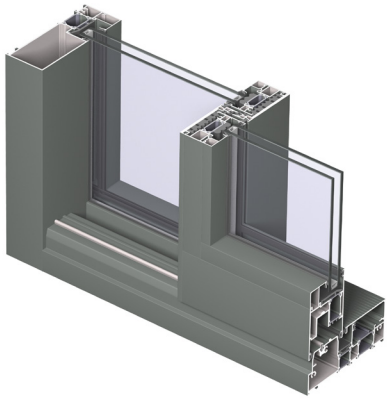

SLIM CHICANE

The CP 155(-LS) Slim Chicane introduces a sliding window with a meeting section of only 50 mm visual width, transforming the CP 155(-LS) into a modern design and making it an elegant system, perfectly suited to meet today's trends. The Slim Chicane is applicable to both the slide and lift-slide options in 2-rail and monorail options (inside and outside glazed).

LOW THRESHOLD - ZERO THRESHOLD

Our low and zero threshold solution literally lower the boundaries between insde and outside. A flush threshold gives a very aesthetically pleasing result when the doors are open, as there are no borders to be seen. As an added bonus, this solution significantly improves the accessibility to your building for everyone, especially for people with reduced mobility.

For this solution the bottom proflies are hidden in the floor, and still provide sufficient drainage to prevent water from entering your home.

CP 155-LS CORNER

A corner solution makes it possible to open up spaces without any fixed corner element. This innovation is an answer to the current architectural need for large glass surfaces with high insulation values. The corner solution creates a perfect opportunity to invite nature into your home, removing the indoor and outdoor boundaries.

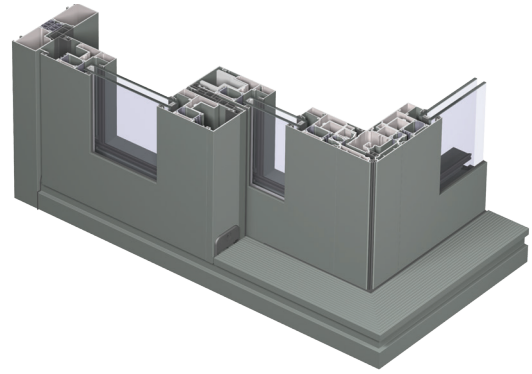

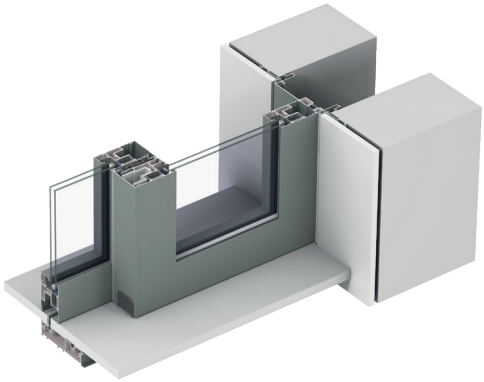

THE POCKET OPTION

The modular pocket solution provides for up to eight vents to be slid into your wall, thereby creating an maximal open space without visible elements when the vents are open. Optimal flush aesthetics in the open position can be realized by applying the same finish on the cover profile and the wall. The pocket solution is available for the lift & slide systems in duo rail, 3-rail, or up to 8-rail (multi-rail) compositions.

PERFORMANCES

	ENERGY										
	Thermal Insulation [1] EN ISO 10077-2	Uf-value up to 1.07 W/m² K (*), depending on the frame/vent combination.									
	COMFORT										
	Acoustic performance [2] EN ISO 140-3; EN ISO 717-1	Rw (C; Ctr) = 35 (-2;-5) dB / 42 (-1;-3) dB, depending on glazing type									
	Air tightness, max. test pressure [3] EN 12207	1 (150 Pa)		2 (300 Pa)		3 (600 Pa)			4 (600 Pa)		
	Water tightness[4] EN 12208	1A	2A	3A	4A	5A	6A	7A	8A (450 Pa)	9A (600 Pa)	E900 (900 Pa)
	Wind load resistance, max. test pressure [5] EN 12211; EN 12210	1 (400 Pa)	2 (800 Pa)	3 (1200 Pa)	4 (1600 Pa)	5 (2000 Pa)	Exxx (> 2000 Pa)				
	Wind load resistance to frontal deflection EN 12211; EN 12210	A (≤ 1/150)		B (≤ 1/200)		C (≤ 1/300)					
	SAFETY										
	Burglar resistance[6] ENV 1627 – ENV 1630	RC 1		RC 2		RC 3					

This table shows classes and values of performances, which can be achieved for specific configurations and opening types.

(1) The Uf-value measures the heat flow. The lower the Uf-value, the better the thermal insulation of the frame.
(2) The sound reduction index (Rw) measures the capacity of the sound reduction performance of the frame and glass.
(3) The air tightness test measures the volume of air that would pass through a closed window at a certain air pressure.
(4) The water tightness testing involves applying a uniform water spray at increasing air pressure until water penetrates the window.
(5) The wind load resistance is a measure of the profile's structural strength and is tested by applying increasing levels of air pressure to simulate the wind force.
(6) The burglar resistance is tested by static and dynamic loads, as well as by simulated attempts to break in using specified tools.
This variant requires specific burglar resistance accessories.

(*) Value for HI-variant with Minergie label

icaret · Eskişehir, Türkiye
+90 542 733 00 41 · info@shiprade.com · www.shiprade.com