Architect: POM ARQUITECTES
Photo: Wenzel

CP 130

Exactly what you need

SHIPRADE

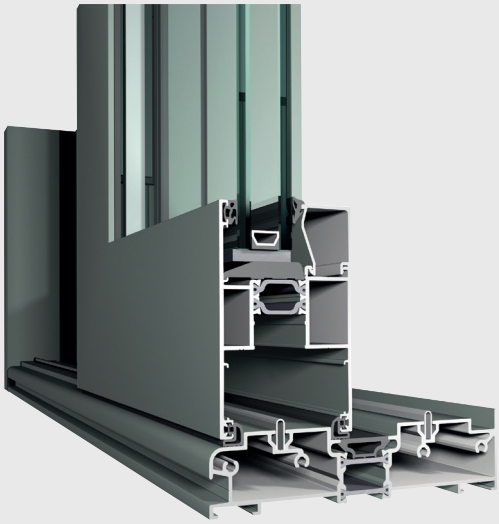

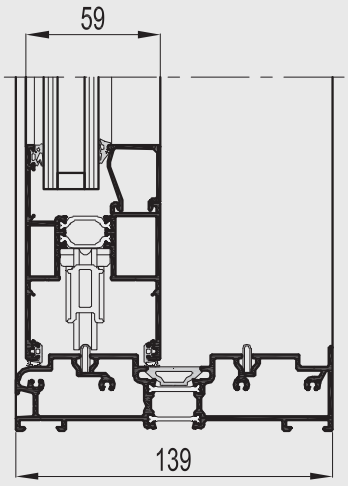

Our Concept Patio® 130 has been the go-to sliding system within the aluminium joinery industry for many years. It is our most complete sliding system with 100+ different configurations, including an open corner, pocket, multirail, and a slim chicane. The variety of threshold options make it equally suitable for new-builds and renovation projects.

The system is thoroughly tested and its results are verified by independent notified bodies. Because of the broad range of available profiles and accessories, you can find the option exactly fitting your needs without overengineering the project, keeping costs under control.

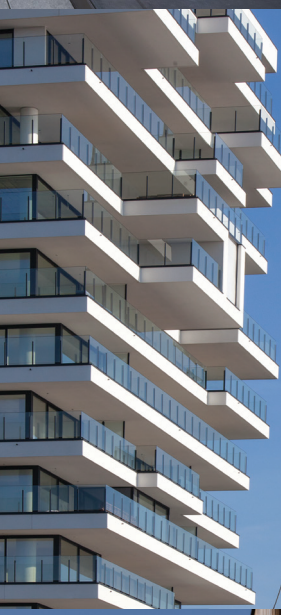

MONORAIL, DUO RAIL, 3-RAIL OR MULTI-RAIL

A monorail combines a moving part with a fixed glazed element, anchored directly into the outer frame profile, resulting in less visible aluminium. The fixed pane can be positioned on the inside (inside glazed) or on the outside (outside glazed) of the element, the latter simplifies installation of large glass panes from the outside of the building. Both possibilities are available on slide as well as lift-slide variants.

MONORAIL	CP 130	CP 130-LS
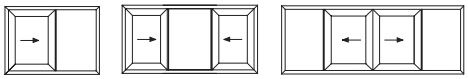	X	X
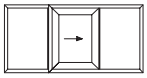	X	X

A duo rail integrates 2 tracks in its frame, which means the element will be symmetrical, with continuous lines. As all sashes can slide, users are very flexible with their interior design, now or in the future.

DUO RAIL	CP 130	CP 130-LS
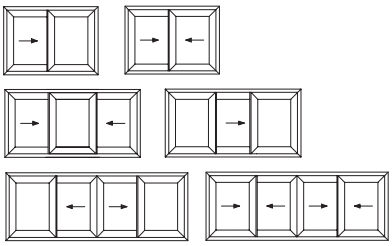	X	X

A 3-rail integrates an third track in the outer frame. Biggest advantage of this solution is that you can create a maximum opening of 2/3 of the total element width. When all sashes are sliding, you can choose on which side you put all 3 panels.

3-RAIL	CP 130	CP 130-LS
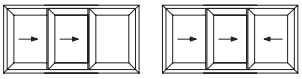	X	X

For the biggest openings we have the **multi-rail** variant, available only in the lift-and-slide variant. This solution allows an expansion of outer frames from two to up to eight rails, facilitating creative designs with very large openings. This option is often combined with a pocket solution:

The modular **Pocket solution** provides for up to eight sashes to be slid into your wall, thereby creating an open space without visible elements when the window is open. Optimal flush aesthetics in the open position can be realized by applying the same colour as the wall to the finishing profile.
The pocket solution is available for the lift & slide systems from 2 up to 8 (multi-rail) tracks, and can optionally be combined with a **Floor Finish** threshold as show below.

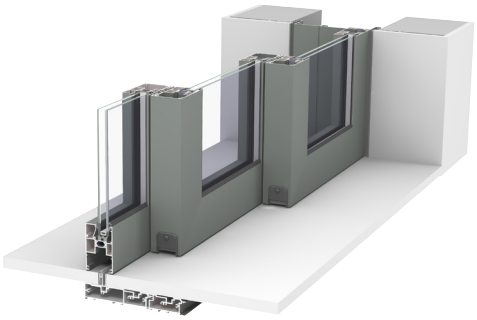

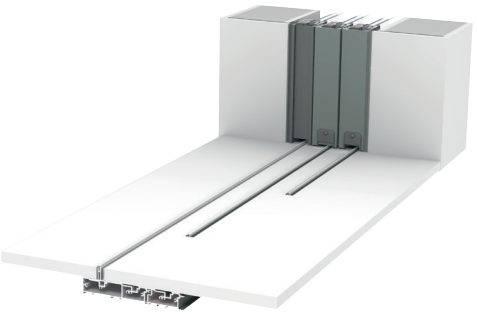

TECHNICAL CHARACTERISTICS

Variants		CP 130	CP 130-LS
Visible width / height	Frame / Threshold	From 28 mm to 50 mm	From 20 mm to 55 mm
	Vent	94 mm	94 mm
	T-profile	from 76 mm to 154 mm	from 76 mm to 154 mm
	Meeting section	50mm / 69 mm / 98 mm	50mm / 69 mm / 98 mm
	Meeting section 4 doors	194 mm	194 mm
Overall system depth	Frame	Monorail : 130 mm Duo Rail : 110 mm / 130 mm / 139 mm 3-Rail : 181 mm / 210 mm	Monorail : 130/139 mm Duo Rail : 139 mm 3-Rail : 210 mm
	Vent	59 mm	59 mm
Maximal Vent height		2700 mm	2700 mm
Maximal vent weight		300 kg	400 kg
Rebate height		25 mm	25 mm
Glass thickness		up to 43 mm	up to 43 mm
Glazing method		dry glazing with EPDM or neutral silicones	dry glazing with EPDM or neutral silicones
Thermal insulation		23 mm, 18.6 mm and 32 mm fibreglass reinforced polyamide strips	23 mm and 32 mm fibreglass reinforced polyamide strips
HI variant		extra insulation gaskets	extra insulation gaskets

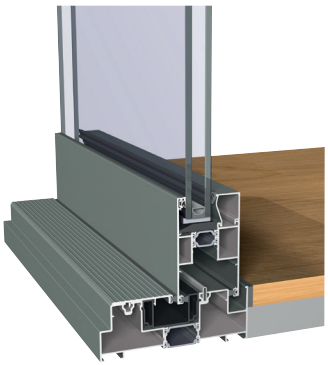

Flush floor detail

CP 130-LS Monorail Outside glazing

CP 130-LS 3-rail Low treshold

PERFORMANCES

	ENERGY										
	Thermal Insulation [1] EN ISO 10077-2	Uf-value down to 2.35 W/m²K (*), depending on the frame/vent combination.									
	COMFORT										
	Acoustic performance [2] EN ISO 140-3; EN ISO 717-1	Rw (C; Ctr) = 35 (-2;-6) dB / 39 (-1;-3) dB, depending on glazing type									
	Air tightness, max. test pressure [3] EN 12207	1 (150 Pa)	2 (300 Pa)	3 (600 Pa)	4 (600 Pa)						
	Water tightness [4] EN 12208	1A (0 Pa)	2A (50 Pa)	3A (100 Pa)	4A (150 Pa)	5A (200 Pa)	6A (250 Pa)	7A (300 Pa)	8A (450 Pa)	9A (600 Pa)	E750 (750 Pa)
	Wind load resistance, max. test pressure [5] EN 12211; EN 12210	1 (400 Pa)	2 (800 Pa)	3 (1200 Pa)	4 (1600 Pa)	5 (2000 Pa)	Exxx (> 2000 Pa)				
	Wind load resistance to frontal deflection EN 12211; EN 12210	A (≤ 1/150)	B (≤ 1/200)	C (≤ 1/300)							
	SAFETY										
	Burglar resistance [6] EN(V) 1627 – 1630	RC 1	RC 2	RC 3							

This table shows classes and values of performances, which can be achieved for specific configurations and opening types.

(1) The Uf-value measures the heat flow. The lower the Uf-value, the better the thermal insulation of the frame.
(2) The sound reduction index (Rw) measures the capacity of the sound reduction performance of the frame and glass.
(3) The air tightness test measures the volume of air that would pass through a closed window at a certain air pressure.
(4) The water tightness testing involves applying a uniform water spray at increasing air pressure until water penetrates the window.
Depending on the bottom solution, different values are achieved.
(5) The wind load resistance is a measure of the profile's structural strength and is tested by applying increasing levels of air pressure to simulate the wind force.
(6) The burglar resistance is tested by static and dynamic loads, as well as by simulated attempts to break in using specified tools.
This variant requires specific burglar resistance accessories.

(*) Value for HI-variant

SHIPRADE

TOGETHER FOR BETTER

SECURE SLIM CHICANE

The slim chicane variant of the CP 130 reduces the sightlines of the system even more, but does it exactly where it matters most: in the center of your view.

The slim chicane variant can be used in any situation where you don't have a handle on the vertical profile.

A visible width of 50mm gives the system a clean look, while the RC2 certificate provides piece of mind to the home owner.

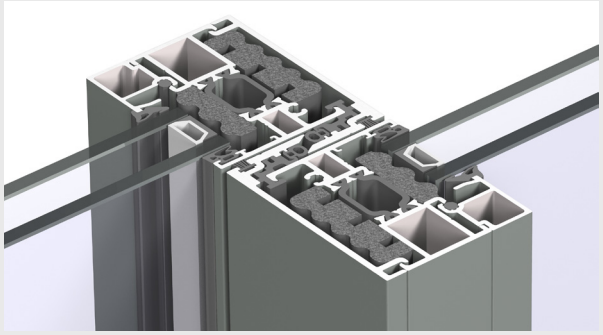

The RC2 certificate applies to almost all other configurations of the CP 130 system.

OPEN / GLASS CORNERS

An open corner gives that special touch to any project, opening up spaces without any fixed corner profiles.

The corner solution creates a perfect opportunity to link your inside living areas with the terrace.

Depending on the project's requirements, another option is the glass corner. Although this is a closed corner, it does offer maximum transparency and sunlight.

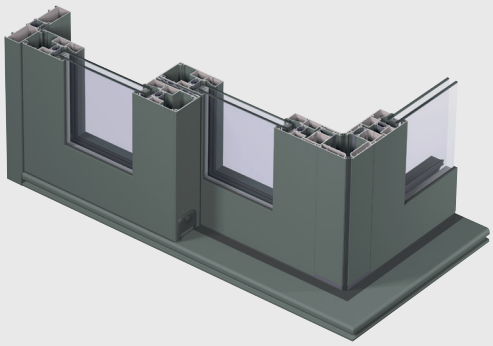

Shiprade Dış Ticaret · Eskişehir, Türkiye
+90 542 733 00 41 · info@shiprade.com · www.shiprade.com