CONCEPT FOLDING 77

Invite nature into your building

SHIPRADE

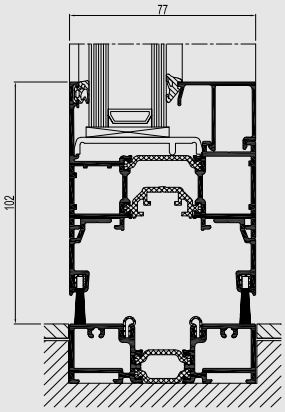

People are continuously looking for ways to maximize their space, as well visually as physically. The Concept Folding® 77 offers them the opportunity to optimize the utilization of their rooms, drawing the external environment into their homes. Next to the improved space utilization, this innovative system offers the advantage of loads of daylight coming in, as well as an aesthetical design. Another practical feature of CF 77 is the optional door locking principle which allows to use the first leaf as an entrance door without affecting the folding capacity of the system.

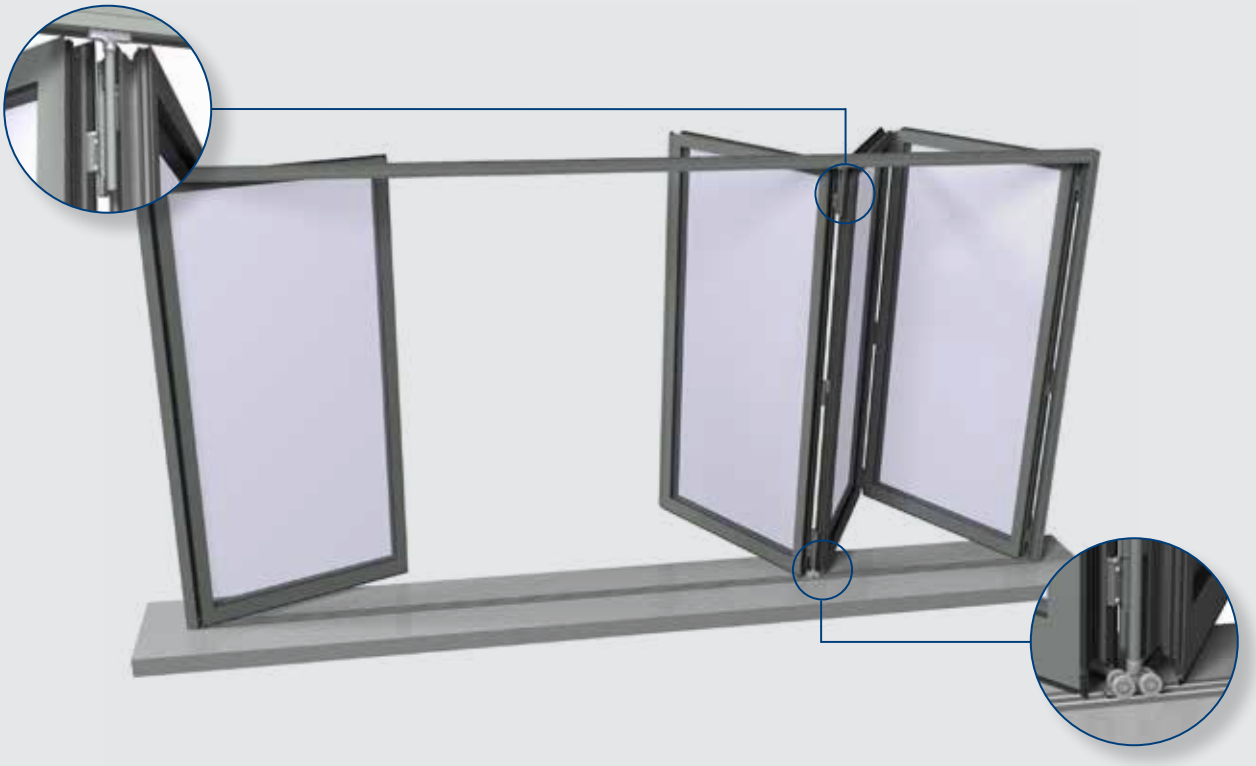

A WIDE RANGE OF SOLUTIONS

With CF 77, design and user friendliness go hand in hand with high technical performance. The standalone solution exists out of new profiles, accessories and insulation technologies that have specifically been designed for folding systems. It ensures high insulation values (Uf values down to 2,25 W/m²K) that meet stringent local legislation requirements as well as market demands. Available in a number of configurations using between 2 and 8 door leaves, you can choose a design where the complete set of vents stacks to the same side, or split the design at any position, possibly integrating a central door solution.

Innovative functional and technical features:

- Highly thermally insulating
- Water resistance up to 600 Pa
- Glazing up to 63mm
- 2 to 8 vent combinations
- Burglar resistant variant
- Large vent sizes
- High vent weights
- In- and outward opening using the same profiles
- Window or door functionality for the first vent
- Integrated and centrally built-in bottom rolling system

	Max. vent size (mm)	Max. vent weight	Uw (W/m²K)*	Uf (W/m²K)	Visible width vent-vent sect.
SHIPRADE CF 77	1200x3000	120kg	down to 1,66	down to 2,25	144mm
SHIPRADE CF 77-SL	1200x3000	120kg	down to 1,64	down to 2,31	122mm
SHIPRADE CF 77-AP	1200x3000	120kg	down to 1,66	down to 2,25	144mm
SHIPRADE CF 77-SL/AP	1200x3000	120kg	down to 1,64	down to 2,31	122mm

* *Ug: 1,1 W/m²K*
4-panel: 4000 x 2700 mm

Design variants

Next to the functional design, the CF 77 is supplemented with a Slim-Line variant, the CF 77-SL, featuring a narrower visible width. Both designs are available in four different door sill solutions: High Performance, Double Weather Seal, Low Threshold and Flat Bottom Solution.
The High Performance option offers maximum performance in terms of air, wind and water resistance. The Double Weather Seal solution combines good air, wind and water resistance with decreased threshold and is well suited for renovation projects. The Low Threshold option offers a rise of only 18 mm and finally the Flat Bottom solution allows easy passage and maximum convenience for high traffic.

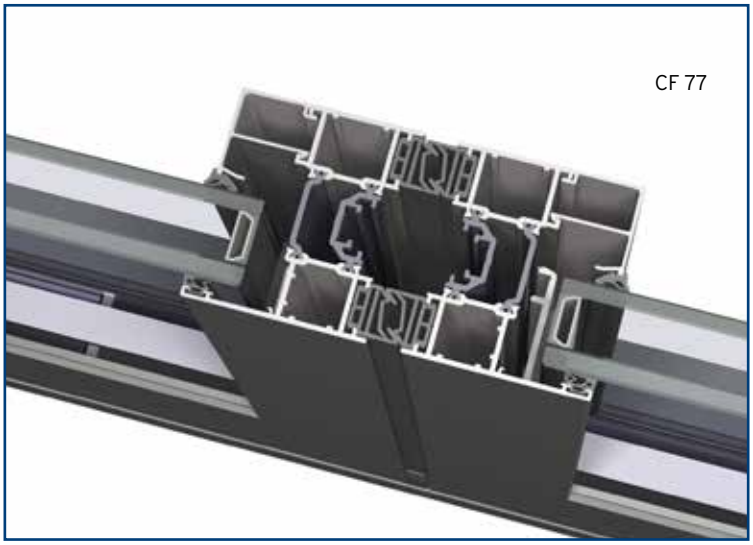

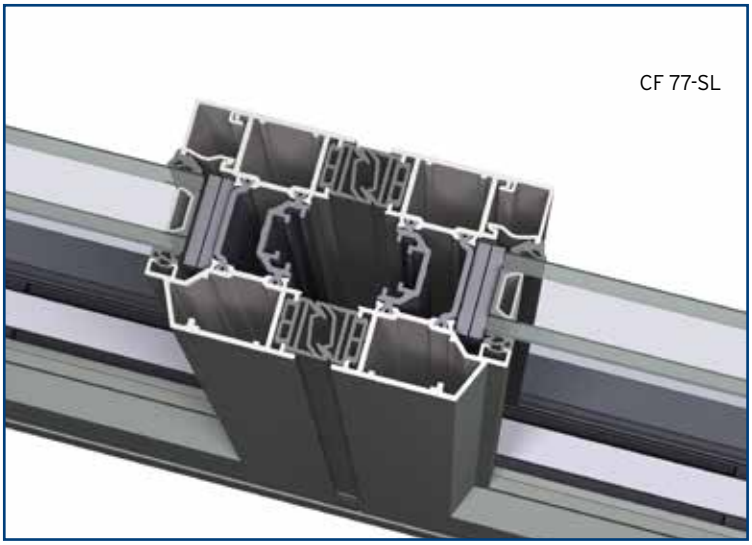

4 different threshold solutions meeting functional needs and performance levels:

	Flat Bottom	Low Threshold	Double Weather Seal	High Performance
Air tightness	Not applicable	Class 2	Class 2	Up to Class 4
Wind load resistance	Not applicable	Class B2	Class B2	Up to Class B3
Burglar Proof*	RC2	RC2	RC2	RC2
Water tightness	Not applicable	Class 4A (150 Pa)	Class 5A (200 Pa)	Up to Class 9A (600 Pa)
	Optimal accessibility Aesthetic bottom solution Economical solution	Easy passing (18 mm threshold) Elementary AWW rating Weather Seal	Double Weather Seal Suitable for renovation	High Performance Double Weather Seal 3 different performance levels in one profile

*The burglar proof classification is in accordance with EN 1627-1630.

Shiprade Dış Ticaret · Eskişehir, Türkiye
+90 542 733 00 41 · info@shiprade.com · www.shiprade.com

SHIPRADE

TOGETHER FOR BETTER